Technical Data // AKZ950/..F-5.08-GREEN

Spacing 5.08 mm

PTR HARTMANN
A Phoenix Mecano Company

Highlights	
2 to 24 poles	
Lift type	
Spacing 5.08 mm	
Wire entry parallel to plugging direction	
Coding with coding star	
With fixing flange	
Wire Sizes	
Solid min	0.2 mm²
Solid max	4.0 mm²
Stranded (flexible) min	0.2 mm²
Stranded (flexible) max	2.5 mm²
Stranded with ferrule min	0.25 mm²
Stranded with ferrule max	2.5 mm²
Dimensions	
Stripped length	6.0 mm
Materials	
Clamp	Brass
Screw	Steel
Screw, flange	Steel
Contact spring	Bronze
Insulating Material	
Material	PA 6.6
Flammability class	UL 94 V-0
Temperatures	
Operating temperature	-40 °C (without mech. load) - 105 °C
Store temperature	-40 °C - 105 °C
Wave Soldering Process	
Soldering temperature, recommended	-
Peak soldering time, recommended	-

Spacing 5.08 mm

Reflow Process

Soldering temperature, recommended	-
Peak soldering time, recommended	-

Colours

GREEN, RAL 6018

LIGHT GREEN, similar RAL 6018

Colours according to RAL, there may be variations on colour due to production conditions.
Special colours on request.

Ratings

		c UL us		VDE	
UseGroup	B	C	D		
Rated voltage	300 V	150 V	300 V	250 V	
Rated current	15 A	15 A	10 A	12 A	
Overvoltage category				III	
Rated wire size				min	max
- solid	AWG 22-12	AWG 22-12	AWG 22-12	0.5 mm² (5 A)	2.5 mm² (12 A)
- stranded	AWG 22-12	AWG 22-12	AWG 22-12	0.5 mm² (5 A)	2.5 mm² (12 A)
Torque	0.50 Nm	0.50 Nm	0.50 Nm	0.50 Nm	
Screw size	M3	M3	M3	M3	
Test voltage	1.60 kV	1.30 kV	1.60 kV	4.0 kV	
Pollution degree				3	

Counterparts (Spacing 5.08 mm)

Pin Strip/Terminal Block

STLZ950	STLZ950-HT	STLZ970	AKZS950

In combination of connectors with different admission data, the lower value is valid.

Spacing 5.08 mm

Accessoires

Figure	Designation	Article Number
	Series AK(Z)950 with pull relief	Order data: on request
	Bridge, 2-pole, insulated, BRI/2-5.0/5.08-LIGHT GREY	Order data: 50000000006
	Bridge, 3-pole, insulated, BRI/3-5.0/5.08-LIGHT GREY	Order data: 50000000007
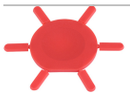	Coding Star CS1-5.0/5.08-RED	Order data: 50000000021
	Bridge, 2-pole, BR/2-5.0/5.08-L7.0	Order data: 50000000008
	Series AK(Z)950 with Separating Element	Order data: on request

Order Data (Spacing 5.08 mm)

Number of Poles	Width (mm)	Article Designation	Article Number	PU
2	20.32	AKZ950/2F-5.08-GREEN	50950022021 F	200
3	25.40	AKZ950/3F-5.08-GREEN	50950032021 F	200
4	30.48	AKZ950/4F-5.08-GREEN	50950042021 F	200
5	35.56	AKZ950/5F-5.08-GREEN	50950052021 E	100
6	40.64	AKZ950/6F-5.08-GREEN	50950062021 E	100
7	45.72	AKZ950/7F-5.08-GREEN	50950072021 E	100
8	50.80	AKZ950/8F-5.08-GREEN	50950082021 D	50
9	55.88	AKZ950/9F-5.08-GREEN	50950092021 D	50
10	60.96	AKZ950/10F-5.08-GREEN	50950102021 D	50
11	66.04	AKZ950/11F-5.08-GREEN	50950112021 D	50
...	...	...	...	...
18	101.60	AKZ950/18F-5.08-GREEN	50950182021 D	50
19	106.68	AKZ950/19F-5.08-GREEN	50950192021 D	50
20	111.76	AKZ950/20F-5.08-GREEN	50950202021 D	50
21	116.84	AKZ950/21F-5.08-GREEN	50950212021 D	50
22	121.92	AKZ950/22F-5.08-GREEN	50950222021 D	50
23	127.00	AKZ950/23F-5.08-GREEN	50950232021 D	50
24	132.08	AKZ950/24F-5.08-GREEN	50950242021 D	50

Spacing 5.08 mm
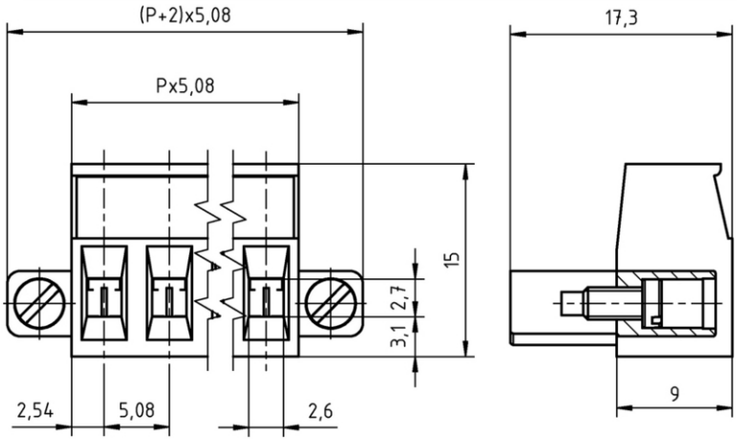
Technical drawing